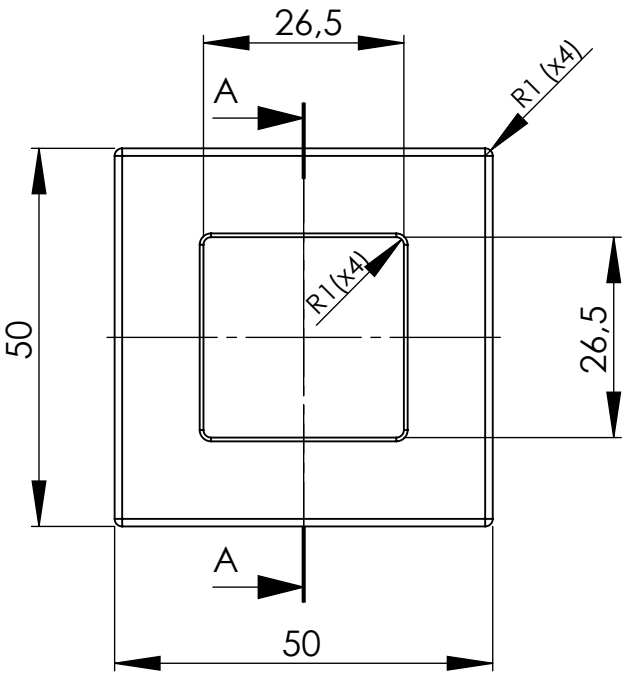

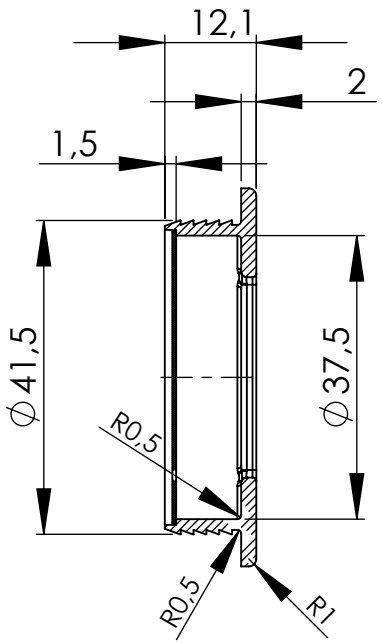

SECTION A-A

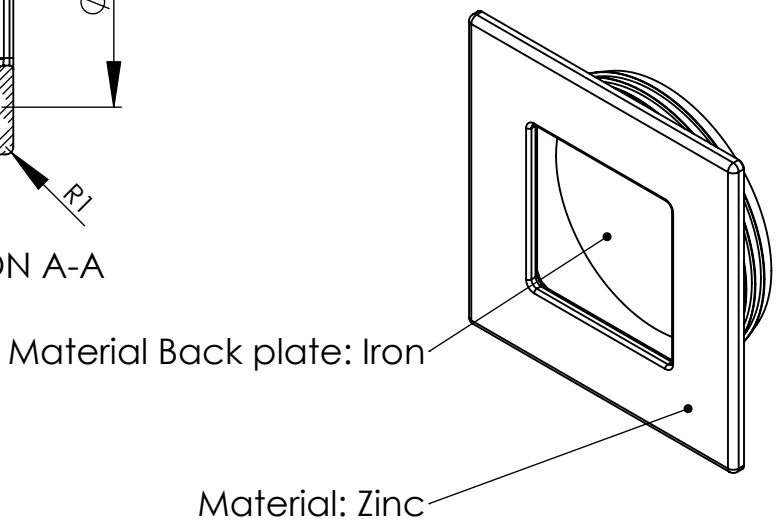

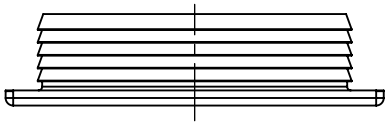

Part name:	Projection:	Sheet format:	Tolerance unless otherwise specified DS/ISO 2768-1M
RECESSED HANDLE INN		A4	
		Scale: 1:1	
Customer:	Drawn by: ps date 30. maj 2013		
Part no.: 512160050	Page 1 of 1		
Material: Zinc	Weight: 40,72 grams		

Linear dimensions:

0-3	3-6	6 - 30	30-120	120-400	400-1000	1000 - 2000
± 0.1	± 0.1	± 0.2	± 0.3	± 0.5	± 0.8	± 1.2

Angle	Radius
± 0.5°	± 5%

furnipart®

Delta 2
DK-8382 Hinnerup
Phone: +45 87 64 35 00
Fax: +45 87 64 35 01

Rev.:	Date:	Name:	Description:

COPYRIGHT: THIS DRAWING MAY NOT BE COPIED OR REPRODUCED IN ANY WAY WITHOUT DIRECT PERMISSION FROM FURNIPART A/S